Neural network based reconstruction of inner magnetospheric density, waves, and energetic electron fluxes

J. Bortnik[1]; X. Chu[2]; Q. Ma[1,3], C. Yue[1]; W. Li[3]; R. Denton[4]; R. M. Thorne[1]; V. Angelopoulos[1];
[1]UCLA, [2]CU-Boulder/LASP, [3]Boston U., [4]Dartmouth College

1. Abstract

The volume of space physics data continues to rise exponentially, and promises to accelerate its growth in the near future. At the same time, our analysis techniques have not kept pace with this growth of data, and often do not exploit the data to their fullest potential. Here *we present a novel method based on machine learning technology, that aims to convert a sequence of point measurements of some given quantity Q made over a long period of time (for example observations made on a satellite), into a 3-dimensional dynamic spatiotemporal model of that quantity.* As an example, we show a 3D model of electron plasma density, and a reconstruction of whistler-mode chorus and plasmaspheric hiss waves. We show how these models can be used as inputs to downstream models, that can subsequently predict the dynamics of 'data starved' quantities, such as ultra-relativistic electron fluxes.

2. Introduction

The ability to specify and predict the state of the Earth's inner magnetospheric environment has been a long-standing goal of the space sciences. Here we use a machine-learning approach based on the Artificial Neural Network (**ANN**). Shown below is a schematic illustration of a single neuron with input vector ***x***, weighting vector ***w***, having an activation function *a*(*h*) and output *y* (a). Neurons can be arranged in a simple feedforward neural network as shown in (b), consisting of the input ***x***, two hidden layers with M and P neurons in each layer respectively, and one neuron giving the output *y*.

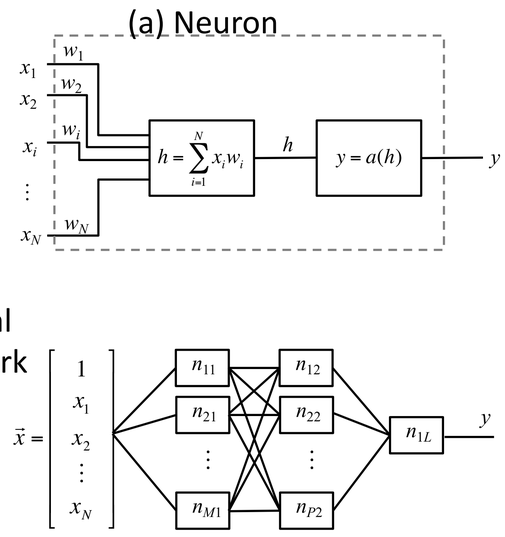

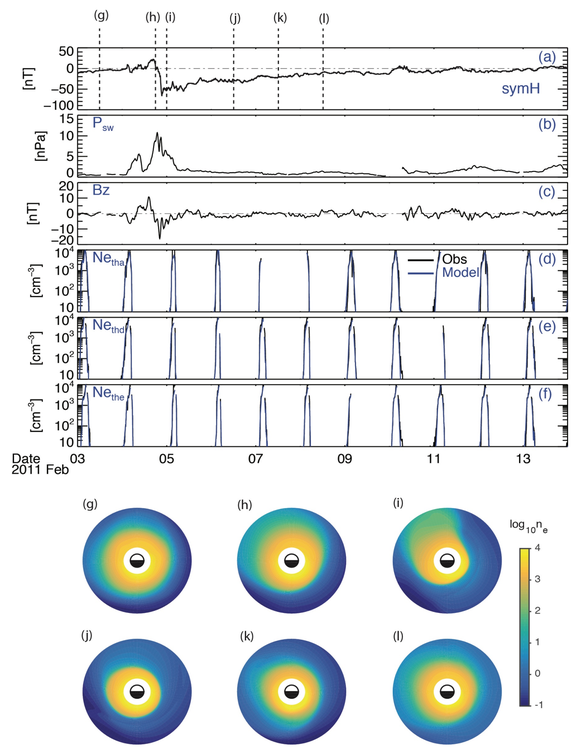

Figure 1. ANN reconstruction of the equatorial electron density for the Feb 4, 2011 geomagnetic storm. Panels (d-f) show observed (black) vs modeled (blue) densities by THEMIS A, D, and E.

3. Results

We use data from the Van Allen Probes and THEMIS satellites to train ANN models that are able to reconstruct the plasmaspheric density (Figure 1), whistler-mode chorus waves (Figure 2), and plasmaspheric hiss waves (Figure 3). In each case, the approach is almost identical, using as inputs the spatial location of the satellite at the time of observation (L-shell, MLT and latitude), and a geomagnetic index (typically either sym-H or AL) to describe the state of the magnetosphere. The data, model and indices are all at a 5-minute cadence, and the index is taken with a time history of 5-10 hours. Errors are estimated on out-of-sample data and typically give a correlation of >95% for density, and >80% for the plasma waves, which is considered to be excellent.

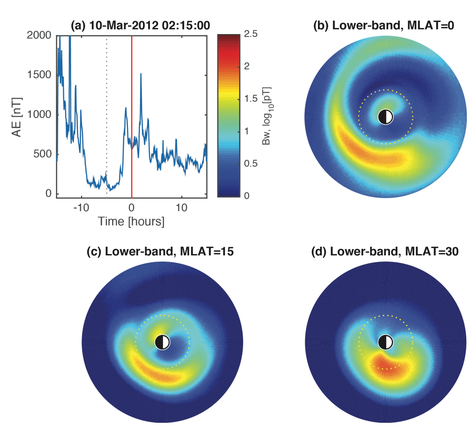

Figure 2. 3-D, ANN reconstruction of whistler-mode chorus waves for the March 10, 2012 geomagnetic storm. Training data is taken from the THEMIS satellite, and 3 different latitude planes are shown in panels b-d: equatorial, 10 deg, and 15 deg.

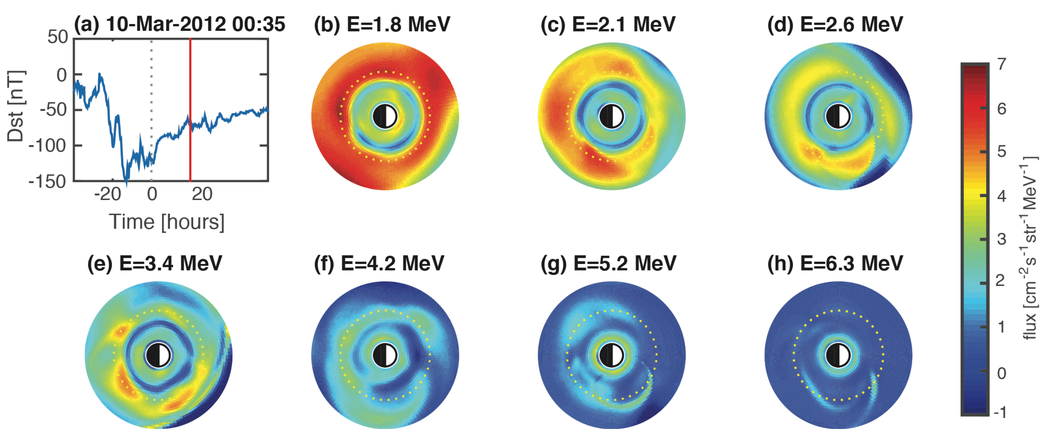

Figure 4. ANN reconstruction of ultra-relativistic fluxes based on REPT-data from the Van Allen Probes mission, for the March 10, 2012 storm.

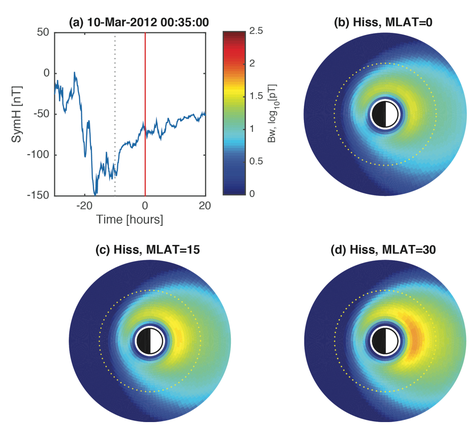

Figure 3. ANN reconstruction of plasmaspheric Hiss waves for the March 10, 2012 storm.

4. Ultra-relativistic fluxes

Radiation belt electron fluxes in the ultra-relativistic (>5 MeV) range are different from those at lower energies (<1 MeV) because very few geomagnetic storms are capable of accelerating electrons up to such high energies. As a result, only a small number (~10) of events exist in the entire Van Allen Probes mission, making this quantity "data starved".

A direct ANN reconstruction of multi-MeV fluxes is shown in Figure 4, where individual satellite tracks start to become visible in the ~5-6 MeV range erroneously.

To address this problem, we use ANN models of the chorus and hiss waves (Figures 2 and 3) as inputs to a physics-based Fokker-Planck simulation, as shown in Figure 5, thus mapping from a data-rich to a data starved environment with excellent results.

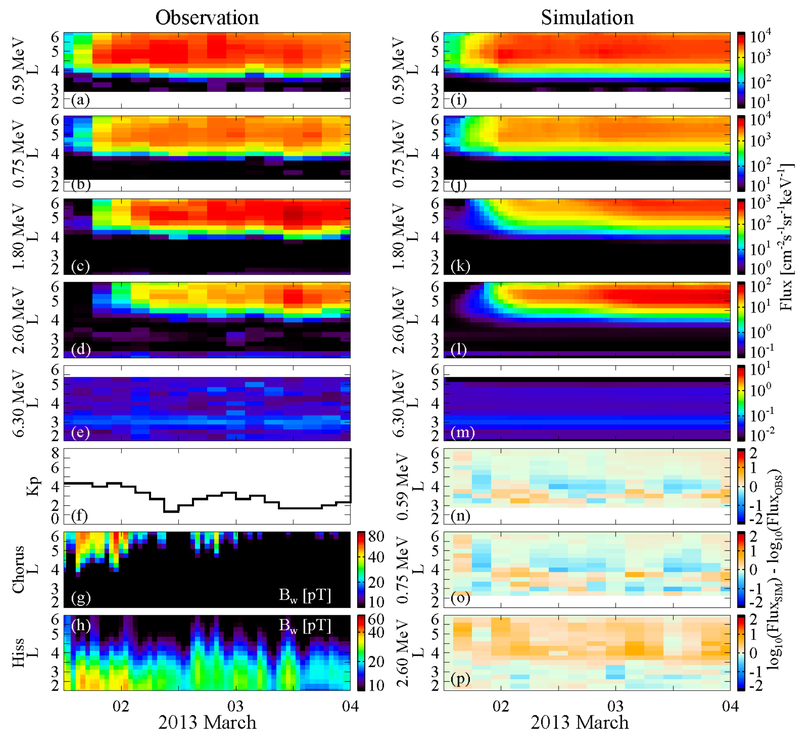

Figure 5. A comparison of observed and simulated radiation belt fluxes during the 1-4 March 2013 geomagnetic storm. The panels represent: electron fluxes in the range 0.59-6.3 MeV from (a-e) the Van Allen Probes observations based on MagEIS and REPT data and (i-m) the Fokker-Planck simulation results; (f) Kp index; MLT-averaged (0-24 hrs) (g) chorus and (h) hiss wave intensities predicted by the ANN models; (n-p) the logarithm difference of electron fluxes between simulation and observation results.

5. Summary

We presented a unified approach for reconstructing the spatiotemporal distribution and evolution of a quantity Q measured on a satellite based on the Artificial Neural Network (ANN) approach.

This ANN-based approach was applied directly to modeling plasmaspheric electron number density, whistler mode chorus waves, and plasmaspheric hiss waves with high accuracy.

In cases where insufficient data exists to apply this approach directly such as ultra-relativistic electron fluxes, we demonstrated the use of a physics-based diffusion equation fed by ANN-models to map from a data-rich to a data-starved environment.

Contact

Prof. Jacob Bortnik
Department of Atmospheric and Oceanic Sciences,
University of California, Los Angeles (UCLA)
Los Angeles, California, USA
Email: jbortnik@gmail.com
Website: https://dept.atmos.ucla.edu/jbortnik

References

1. Bortnik, J., X. Chu, Q. Ma, W. Li, X. Zhang, R. M. Thorne, V. Angelopoulos, R. E. Denton, C. A. Kletzing, G. B. Hospodarsky, H. E. Spence, G. D. Reeves, S. G. Kanekal, and D. N. Baker, Artificial Neural Networks for Determining Magnetospheric Conditions, in Machine Learning Techniques for Space Weather, Elsevier Inc., doi: 10.1016/B978-0-12-811788-0.00011-1., 2018.
2. Chu, X., et al. (2017), A neural network model of three-dimensional dynamic electron density in the inner magnetosphere, J. Geophys. Res. Space Physics, 122, 9183–9197, doi:10.1002/ 2017JA024464.
3. Chu, X. N., J. Bortnik, W. Li, Q. Ma, V. Angelopoulos, and R. M. Thorne (2017), Erosion and refilling of the plasmasphere during a geomagnetic storm modeled by a neural network, Journal of Geophysical Research: Space Physics, Volume 122, issue 7, pp. 7118-7129, doi: 10.1002/2017JA023948.
4. Bortnik, J., W. Li, R. M. Thorne, and V. Angelopoulos (2016), A unified approach to inner magnetospheric state prediction, J. Geophys. Res. Space Phys., 120, doi:10.1002/2015JA021733.